GLASSCRAFT DOOR COMPANY

"Value Series FiberCraft"

FLUSH GLAZED FIBERGLASS SINGLE DOOR

INSWING / OUTSWING "NON-IMPACT"

L. F. SCHMIDT LICENSE No. 43409 STATE OF FLORIDA PROFESSIONAL ENGINEER

Digitally signed by Lyndon F Schmidt
Date: 2026.09.15 07:59:01 -04'00'

This item has been digitally signed and sealed by **L. F. Schmidt, P.E.** on the date adjacent to the seal.

Printed copies of this document are not considered signed and sealed and the signature must be verified on any electronic copies.

THIS PRODUCT APPROVAL IS VALID ONLY FOR THE STATE OF FLORIDA

GENERAL NOTES

1. This product has been evaluated and is in compliance with the 9th Edition (2026) Florida Building Code (FBC) structural requirements excluding the "High Velocity Hurricane Zone" (HVHZ).
2. Product anchors shall be as listed and spaced as shown on details. Anchor embedment to base material shall be beyond wall dressing or stucco.
3. When used in areas requiring wind borne debris protection, this product is required to be protected with an impact resistant covering that complies with FBC Sections 1609.1.2 & R301.2.1.2.
4. For 2x stud framing construction, anchoring of these units shall be the same as that shown for 2x buck masonry construction.
5. Site conditions that deviate from the details of this drawing require further engineering analysis by a licensed engineer or registered architect.

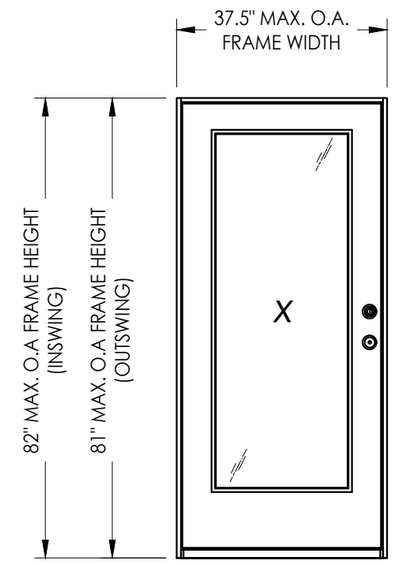

CONFIGURATION	DESIGN PRESSURE (PSF) INSWING		DESIGN PRESSURE (PSF) OUTSWING	
	POSITIVE	NEGATIVE	POSITIVE	NEGATIVE
X	+50.0	-55.0	+50.0	-50.0

TABLE OF CONTENTS

SHEET#	DESCRIPTION
1	Typical elevations, design pressures & general notes
2	Door panel details
3	Horizontal & vertical cross sections (2x buck)
4	Horizontal & vertical cross sections (1x buck)
5	Horizontal & vertical cross sections (Direct to Masonry)
6	Vertical cross sections
7	Buck & frame anchoring
8	Bill of materials & Components

Documents Prepared By:
Lyndon F. Schmidt
P.E. No. 43409
RW BUILDING CONSULTANTS, INC.
P.O. Box 230, Valrico, FL 33595
Phone No.: 813.659.9197
FBPE Registry No. 9813

PRODUCT: GLASSCRAFT DOOR CO.

PART OR ASSEMBLY: TYPICAL ELEVATION, DESIGN PRESSURES & GENERAL NOTES

NO.	DATE	BY
1	9/01/26	UPDATE TO 9TH ED. (2026) FBC LFS

REVISIONS

DATE: 6/18/25
SCALE: N.T.S.
DWG. BY: LFS
CHK. BY: RW
DRAWING NO.: FL-47587.2
SHEET 1 OF 8

© 2025 R.W. BUILDING CONSULTANTS INC.

Z:\2023 FBC Drawings\GlassCraft Door Corp\FL-47587 R1\FL-47587.2.dwg

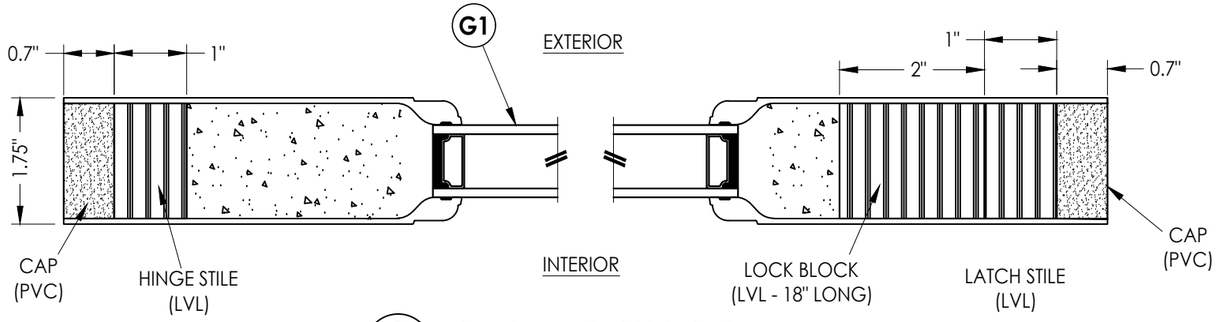

1/2 **HORIZONTAL CROSS SECTION**

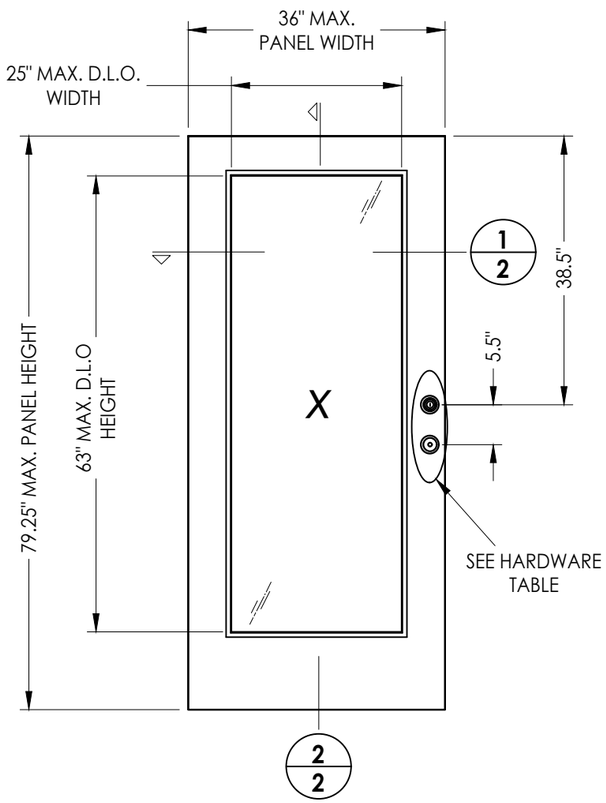

40 **FIBERGLASS DOOR PANEL**
GlassCraft

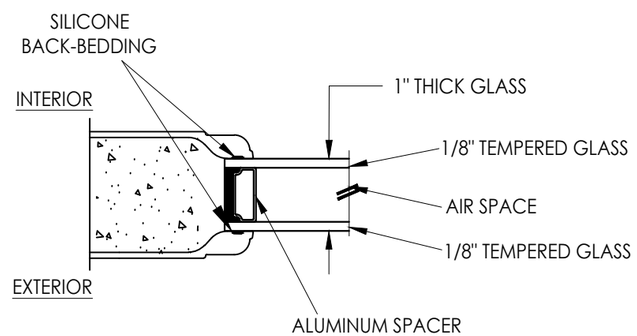

G1 **GLAZING DETAIL**
FLUSH GLAZING

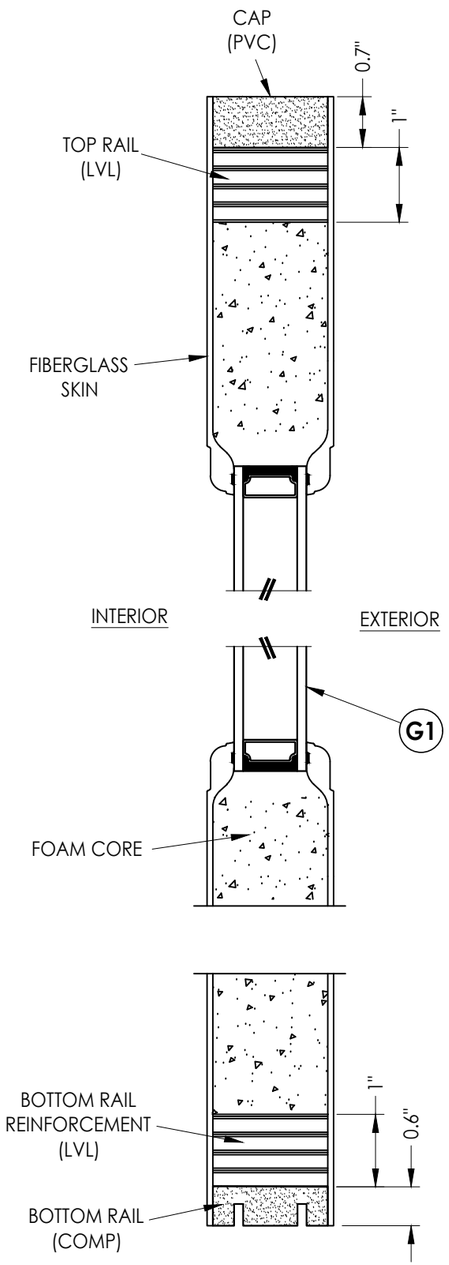

2/2 **VERTICAL CROSS SECTION**

HARDWARE CHART		
MANUFACTURER	MODEL	
KWIKSET	KNOB:	SIGNATURE SERIES
	DEADBOLT:	SIGNATURE SERIES (980)
SCHLAGE	KNOB:	F SERIES
	DEADBOLT:	B60 SERIES

DOOR SKIN: 0.075" MIN. THK. FIBERGLASS
CORE MATERIAL: POLYURETHANE FOAM

Documents Prepared By:
Lyndon F. Schmidt
P.E. No. 43409
RW BUILDING CONSULTANTS, INC.
P.O. Box 230, Valrico, FL 33595
Phone No.: 813.659.9197
FBPE Registry No. 9813

PRODUCT: GLASSCRAFT DOOR CO.
PART OR ASSEMBLY: DOOR PANEL DETAILS

NO.	DATE	BY
1	9/01/26	UPDATE TO 9TH ED. (2026) FBC	LFS

REVISIONS

DATE: 6/18/25
SCALE: N.T.S.
DWG. BY: LFS
CHK. BY: RW
DRAWING NO.: FL-47587.2
SHEET 2 OF 8

© 2025 R.W. BUILDING CONSULTANTS INC.

Z:\2023 FBC Drawings\GlassCraft Door Corp\FL-47587 R1\FL-47587.2.dwg

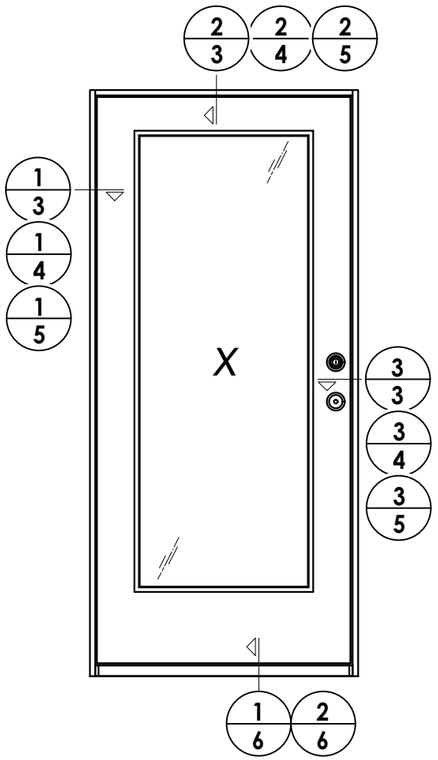

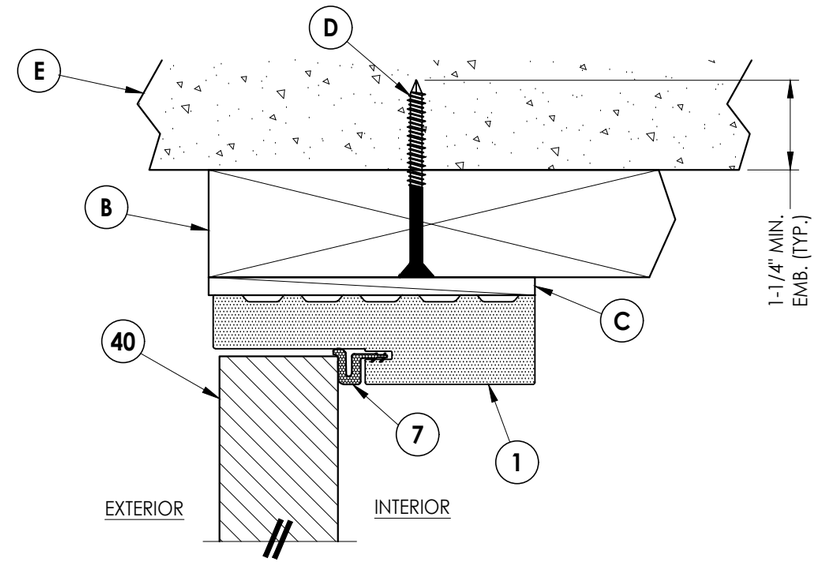

2/3 VERTICAL CROSS SECTION
Outswing shown - Inswing also approved

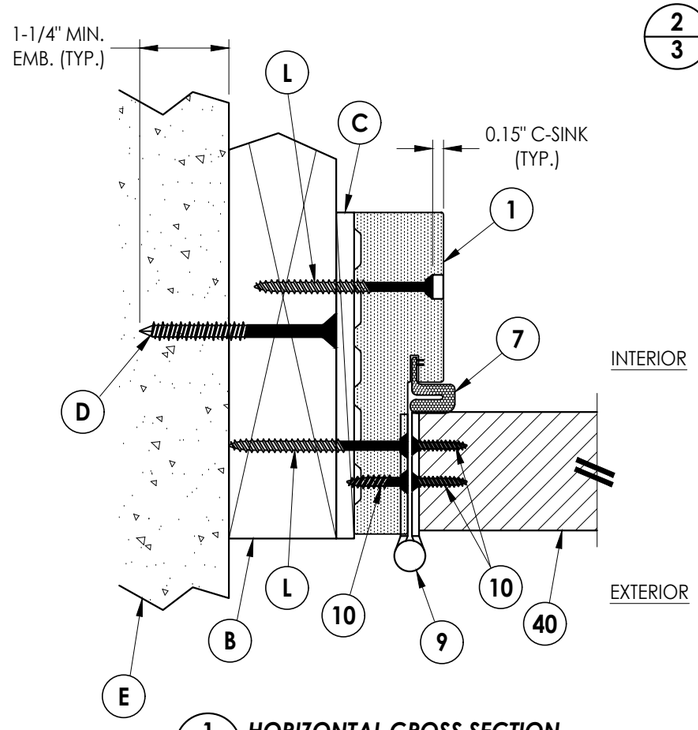

1/3 HORIZONTAL CROSS SECTION
Outswing shown - Inswing also approved

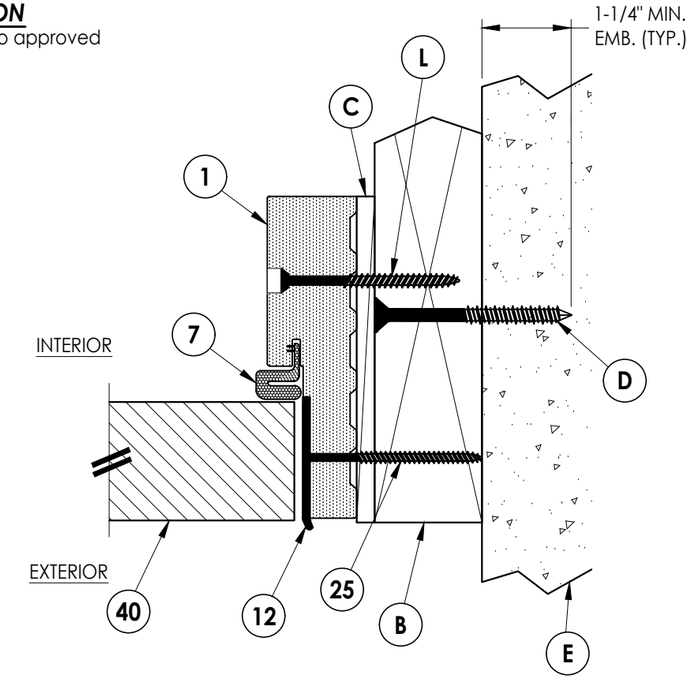

3/3 HORIZONTAL CROSS SECTION
Outswing shown - Inswing also approved

Documents Prepared By:
Lyndon F. Schmidt
P.E. No. 43409
RW BUILDING CONSULTANTS, INC.
P.O. Box 230, Valrico, FL 33595
Phone No.: 813.659.9197
FBPE Registry No. 9813

PRODUCT: GLASSCRAFT DOOR CO.

PART OR ASSEMBLY: HORIZONTAL AND VERTICAL CROSS SECTIONS (2X BUCK)

REVISIONS

NO.	DATE		BY
1	9/01/26	UPDATE TO 9TH ED. (2026) FBC	LFS

DATE: 6/18/25
SCALE: N.T.S.
DWG. BY: LFS
CHK. BY: RW
DRAWING NO.: FL-47587.2
SHEET 3 OF 8

© 2025 R.W. Building Consultants Inc.

Z:\2023 FBC Drawings\GlassCraft Door Corp\FL-47587 R1\FL-47587.2.dwg

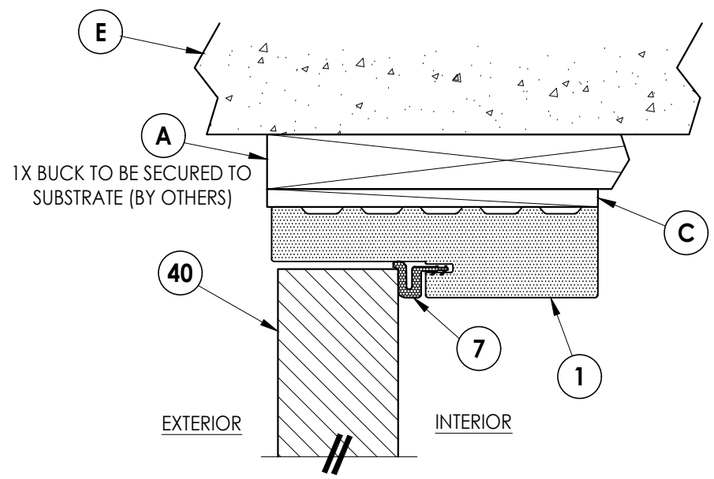

2/4 VERTICAL CROSS SECTION
Outswing shown - Inswing also approved

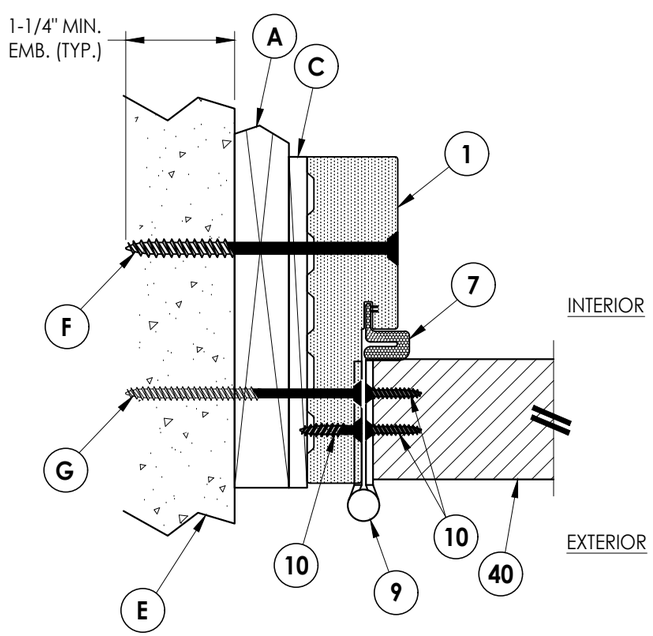

1/4 HORIZONTAL CROSS SECTION
Outswing shown - Inswing also approved

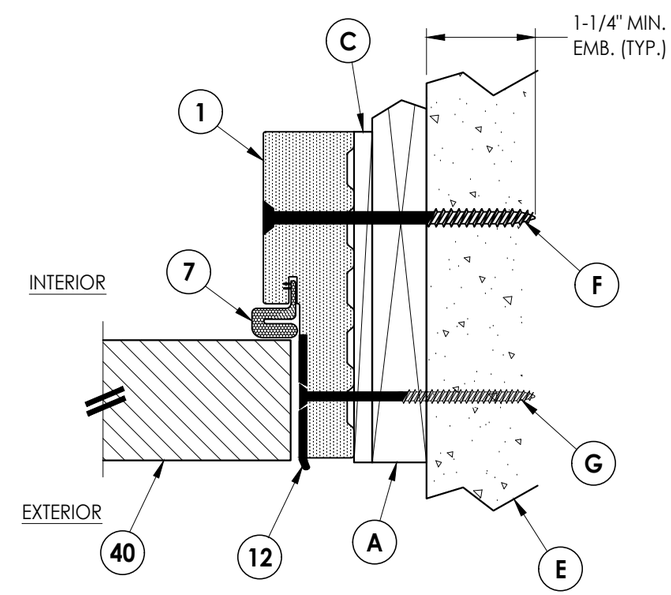

3/4 HORIZONTAL CROSS SECTION
Outswing shown - Inswing also approved

Documents Prepared By:
Lyndon F. Schmidt
P.E. No. 43409

RW BUILDING CONSULTANTS, INC.
P.O. Box 230, Valrico, FL 33595
Phone No.: 813.659.9197
FBPE Registry No. 9813

PRODUCT: GLASSCRAFT DOOR CO.

PART OR ASSEMBLY: HORIZONTAL AND VERTICAL CROSS SECTIONS (1X BUCK)

REVISIONS

NO.	DATE		BY
1	9/01/26	UPDATE TO 9TH ED. (2026) FBC	LFS

DATE: 6/18/25
SCALE: N.T.S.
DWG. BY: LFS
CHK. BY: RW
DRAWING NO.: FL-47587.2
SHEET 4 OF 8

© 2025 R.W. BUILDING CONSULTANTS INC.

Z:\2023 FBC Drawings\GlassCraft Door Corp\FL-47587 R1\FL-47587.2.dwg

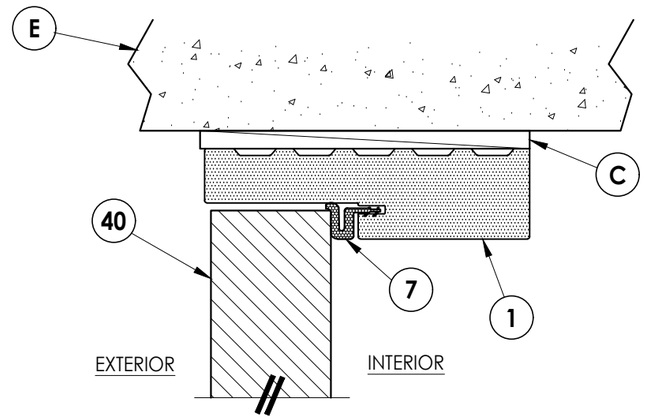

2/5 VERTICAL CROSS SECTION
Outswing shown - Inswing also approved

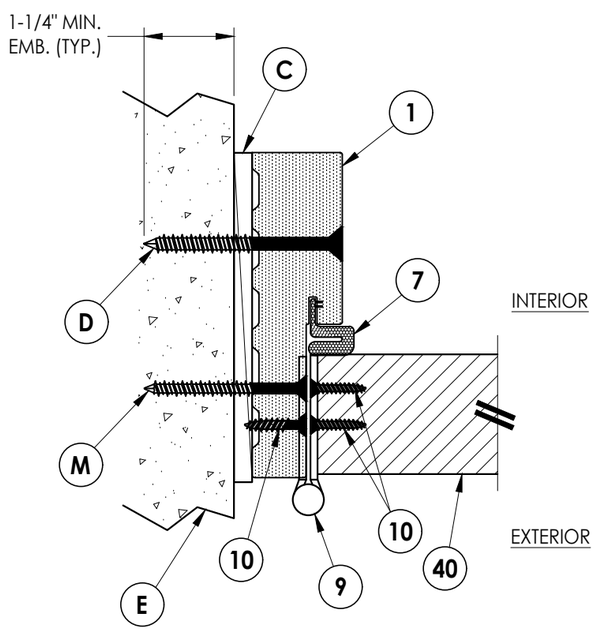

1/5 HORIZONTAL CROSS SECTION
Outswing shown - Inswing also approved

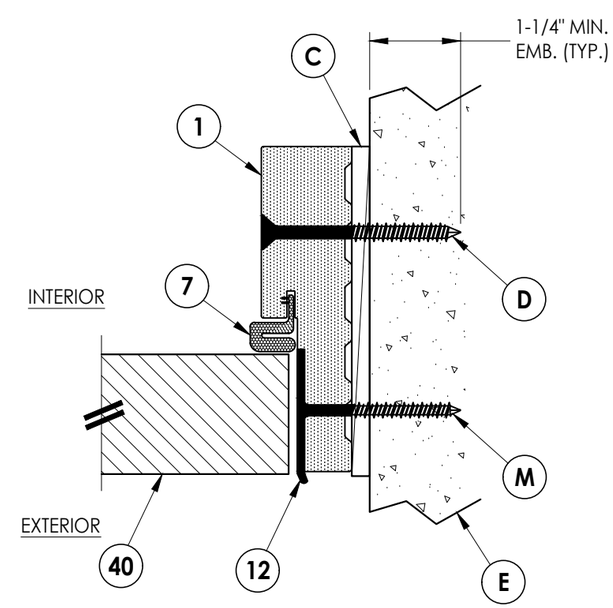

3/5 HORIZONTAL CROSS SECTION
Outswing shown - Inswing also approved

Documents Prepared By:
Lyndon F. Schmidt
P.E. No. 43409

RW BUILDING CONSULTANTS, INC.
P.O. Box 230, Valrico, FL 33595
Phone No.: 813.659.9197
FBPE Registry No. 9813

PRODUCT: GLASSCRAFT DOOR CO.

PART OR ASSEMBLY: HORIZONTAL AND VERTICAL CROSS SECTIONS (DIRECT TO MASONRY)

NO.	DATE	REVISIONS	BY
1	9/01/26	UPDATE TO 9TH ED. (2026) FBC	LFS

DATE: 6/18/25
SCALE: N.T.S.
DWG. BY: LFS
CHK. BY: RW
DRAWING NO.: FL-47587.2
SHEET 5 OF 8

© 2025 R.W. Building Consultants Inc.

Z:\2023 FBC Drawings\GlassCraft Door Corp\FL-47587 R1\FL-47587.2.dwg

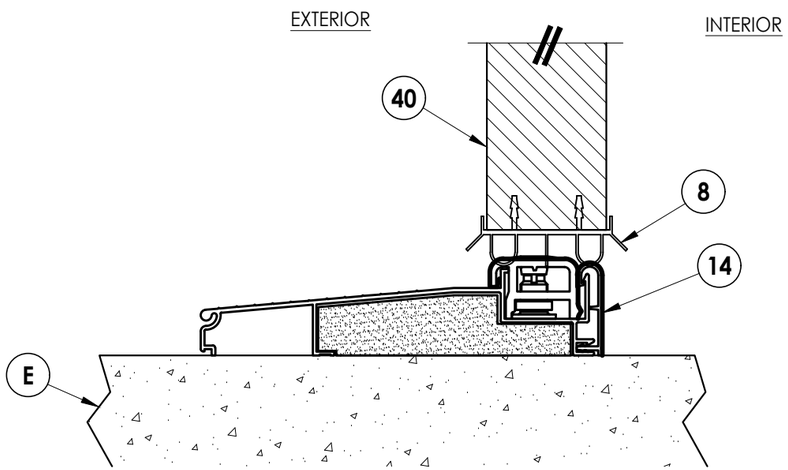

1/6 VERTICAL CROSS SECTION
Inswing sill

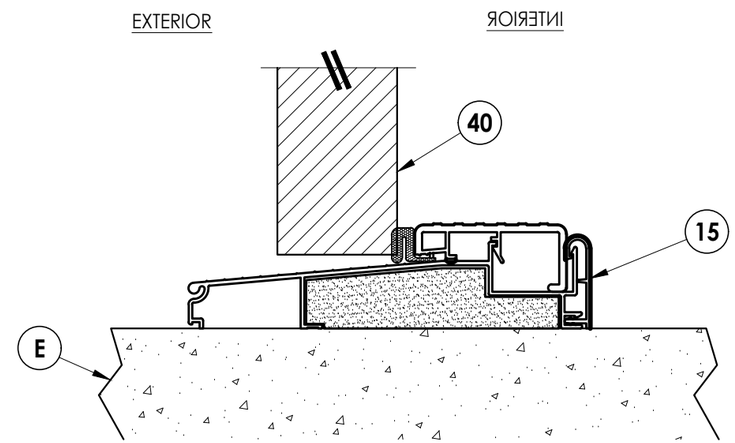

2/6 VERTICAL CROSS SECTION
Outswing sill

Documents Prepared By:
Lyndon F. Schmidt
P.E. No. 43409

RW BUILDING CONSULTANTS, INC.
P.O. Box 230, Valrico, FL 33595
Phone No.: 813.659.9197
FBPE Registry No. 9813

PRODUCT: GLASSCRAFT DOOR CO.

PART OR ASSEMBLY: VERTICAL CROSS SECTIONS

REVISIONS

NO.	DATE		BY
1	9/01/26	UPDATE TO 9TH ED. (2026) FBC	LFS

DATE: 6/18/25
SCALE: N.T.S.
DWG. BY: LFS
CHK. BY: RW
DRAWING NO.: FL-47587.2
SHEET 6 OF 8

© 2025 R.W. Building Consultants Inc.

Z:\2023 FBC Drawings\GlassCraft Door Corp\FL-47587 R1\FL-47587.2.dwg

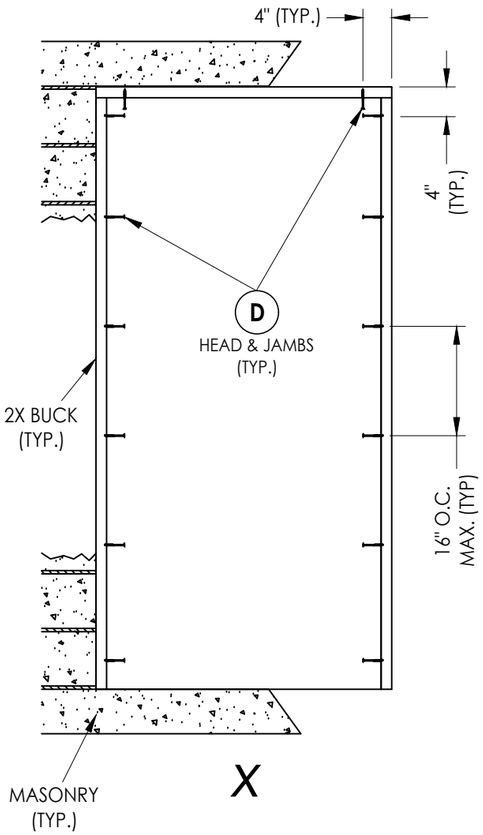

2X BUCK ANCHORING

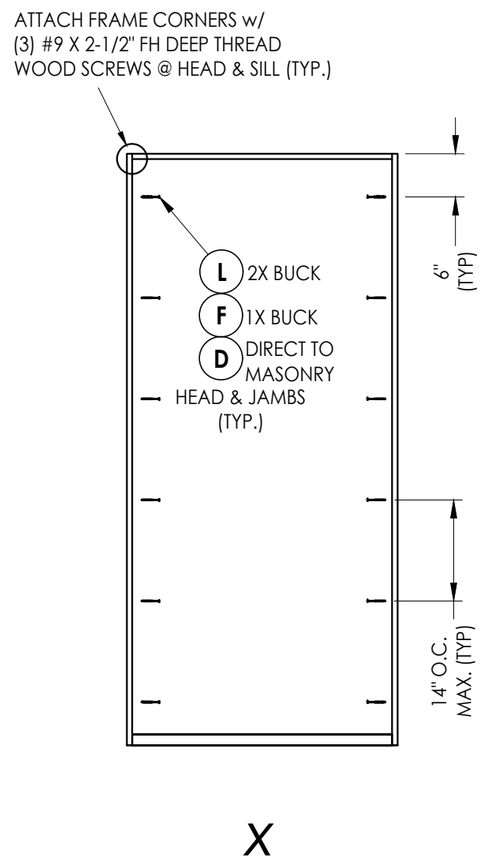

FRAME ANCHORING

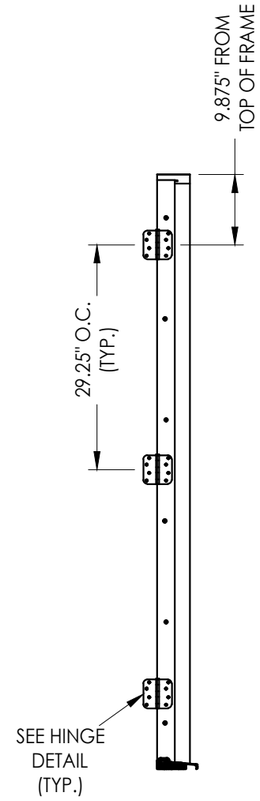

HINGE JAMB

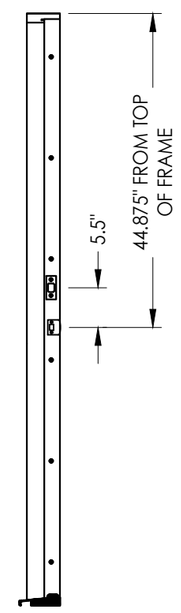

STRIKE JAMB

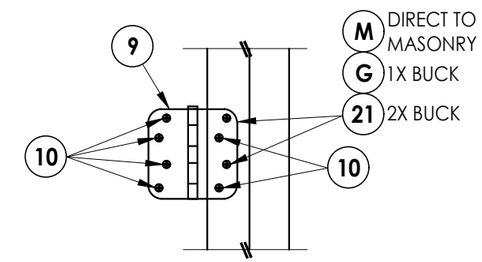

HINGE DETAIL
INSWING

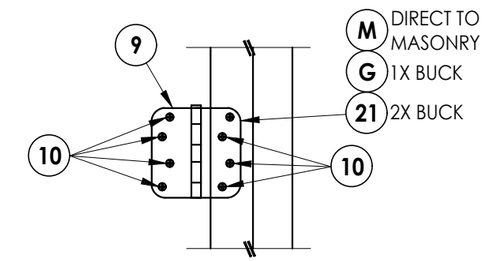

HINGE DETAIL
OUTSWING

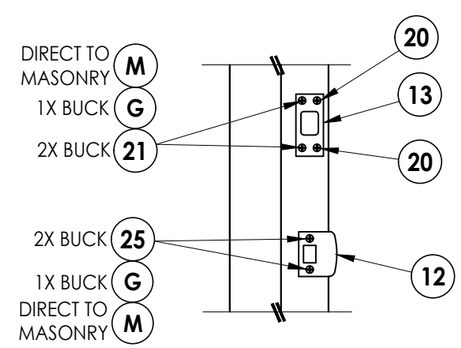

STRIKE PLATE DETAIL
KWIKSET HARDWARE

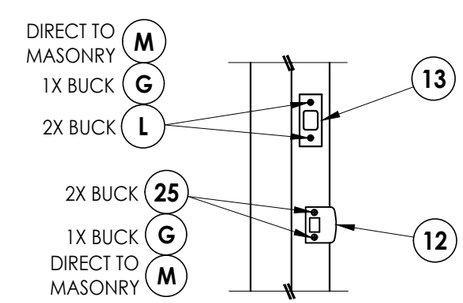

STRIKE PLATE DETAIL
SCHLAGE HARDWARE

HARDWARE DETAILS

Documents Prepared By:
Lyndon F. Schmidt
P.E. No. 43409

RW BUILDING CONSULTANTS, INC.
P.O. Box 230, Valrico, FL 33595
Phone No.: 813.659.9197
FBPE Registry No. 9813

PRODUCT: GLASSCRAFT DOOR CO.

PART OR ASSEMBLY: BUCK & FRAME ANCHORING

NO.	DATE		BY
1	9/01/26	UPDATE TO 9TH ED. (2026) FBC	LFS

REVISIONS

DATE: 6/18/25
SCALE: N.T.S.
DWG. BY: LFS
CHK. BY: RW
DRAWING NO.: FL-47587.2
SHEET 7 OF 8

© 2025 R.W. Building Consultants Inc.

Z:\2023 FBC Drawings\GlassCraft Door Corp\FL-47587 R1\FL-47587.2.dwg

BILL OF MATERIALS

ITEM #	DESCRIPTION	MATERIAL
A	1X BUCK (G >= 0.42)	WOOD
B	2X BUCK (G >= 0.42)	WOOD
C	1/4" MAX. SHIM SPACE	-
D	1/4" X 2-3/4" PFH DeWALT OR ITW CONCRETE SCREW	STEEL
E	MASONRY - 3,000 PSI MIN. CONCRETE CONFORMING TO ACI 301 OR HOLLOW BLOCK CONFORMING TO ASTM C90	CONCRETE
F	1/4" X 3-3/4" PFH DeWALT OR ITW CONCRETE SCREW	STEEL
G	3/16" X 3-1/4" PFH ITW CONCRETE SCREW	STEEL
L	#10 X 2-1/2" PFH WOOD SCREW (1.15" MIN. EMB.)	STEEL
M	3/16" X 2-1/4" PFH ITW CONCRETE SCREW	STEEL
P	1/4" X 2-1/4" PFH DeWALT OR ITW CONCRETE SCREW	STEEL
1	COMPOSITE JAMB	COMP
7	WEATHERSTRIP	FOAM
8	DOOR SWEEP	VINYL
9	4" X 4" HINGE	STEEL
10	#9 X 3/4" PFH WOOD SCREW	STEEL
12	LATCH STRIKE PLATE	STEEL
13	DEADBOLT STRIKE PLATE	STEEL
14	INSWING THRESHOLD	ALUM/COMP
15	OUTSWING THRESHOLD	ALUM/COMP
20	#8 X 1/2" PFH WOOD SCREW	STEEL
21	#12 X 2-1/2" PFH WOOD SCREW	STEEL
25	#8 X 2-1/2" PFH WOOD SCREW	STEEL
40	DOOR PANEL	-

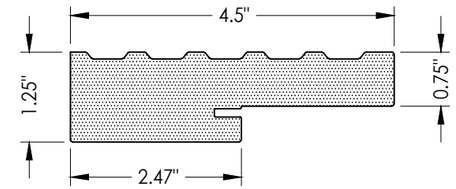

1 **COMPOSITE JAMB**
WORLDWIDE 4EVER

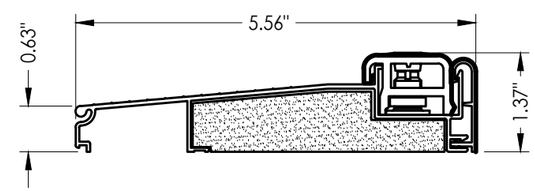

14 **INSWING THRESHOLD**
WORLDWIDE 99-558

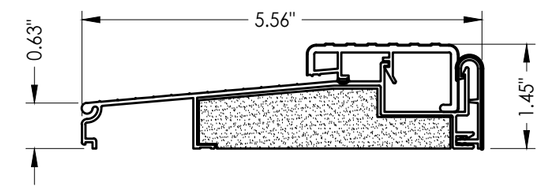

15 **OUTSWING THRESHOLD**
WORLDWIDE 99-558N

CORROSION RESISTANCE - SALTWATER ENVIRONMENTS
Fasteners & connectors in areas within 3000 ft (914 m) of a saltwater coastline shall comply with FBC Sections 1711.1 or R332.1.

CONCRETE ANCHOR NOTES:

1. *Concrete anchor locations at the corners may be adjusted to maintain the min. edge distance to mortar joints.*
2. *Concrete anchor locations noted as "MAX. ON CENTER" must be adjusted to maintain the min. edge distance to mortar joints, additional concrete anchors may be required to ensure the "MAX. ON CENTER" dimension are not exceeded.*
3. *Concrete anchor table:*

ANCHOR TYPE	ANCHOR SIZE	MIN. EMBEDMENT	MIN. CLEARANCE TO MASONRY EDGE	MIN. CLEARANCE TO ADJACENT ANCHOR
ITW BUILDEX TAPCON®	3/16"	1-1/4"	AS SHOWN	1-1/2"
	1/4"	1-1/4"	2"	4"
DeWALT ULTRACON+®	1/4"	1-1/4"	1"	4"

WOOD SCREW INSTALLATION NOTES:

1. *Maintain a minimum 5/8" edge distance, 1" end distance, & 1" o.c. spacing of wood screws to prevent the splitting of wood.*

Documents Prepared By:
Lyndon F. Schmidt
P.E. No. 43409
RW BUILDING CONSULTANTS, INC.
P.O. Box 230, Valrico, FL 33595
Phone No.: 813.659.9197
FBPE Registry No. 9813

PRODUCT: GLASSCRAFT DOOR CO.

PART OR ASSEMBLY: BILL OF MATERIALS & COMPONENTS

NO.	DATE	REVISIONS	BY
1	9/01/26	UPDATE TO 9TH ED. (2026) FBC	LFS

DATE: 6/18/25
SCALE: N.T.S.
DWG. BY: LFS
CHK. BY: RW
DRAWING NO.: FL-47587.2
SHEET 8 OF 8

© 2025 R.W. BUILDING CONSULTANTS INC.

Z:\2023 FBC Drawings\GlassCraft Door Corp\FL-47587 R1\FL-47587.2.dwg